Dimension Drawing - Quattro-II	
QUA482504010	Quattro-II 48/5000/70-50-50 230V

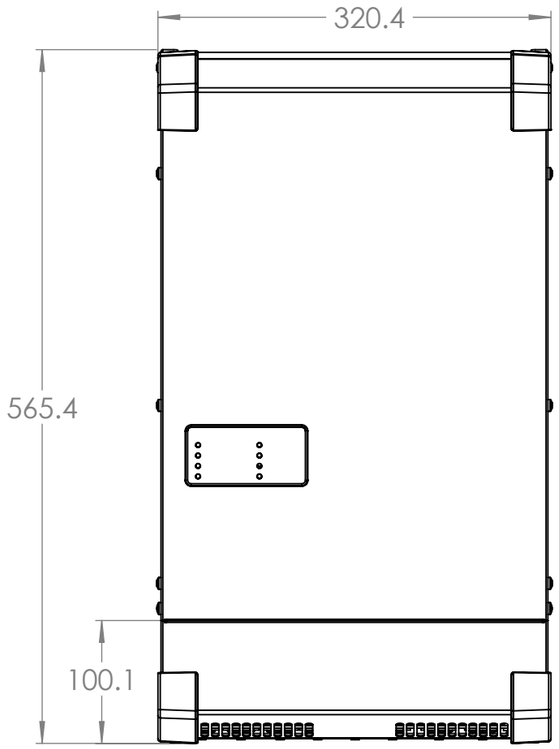

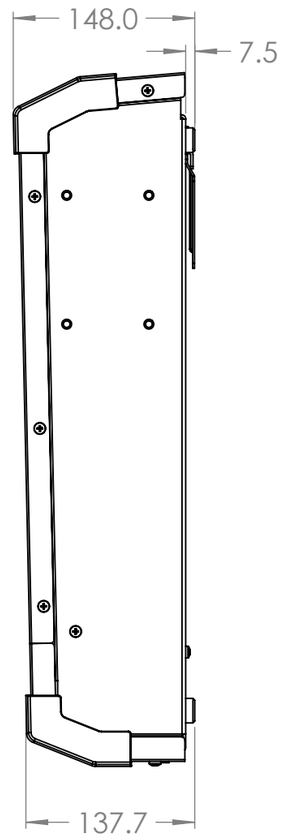

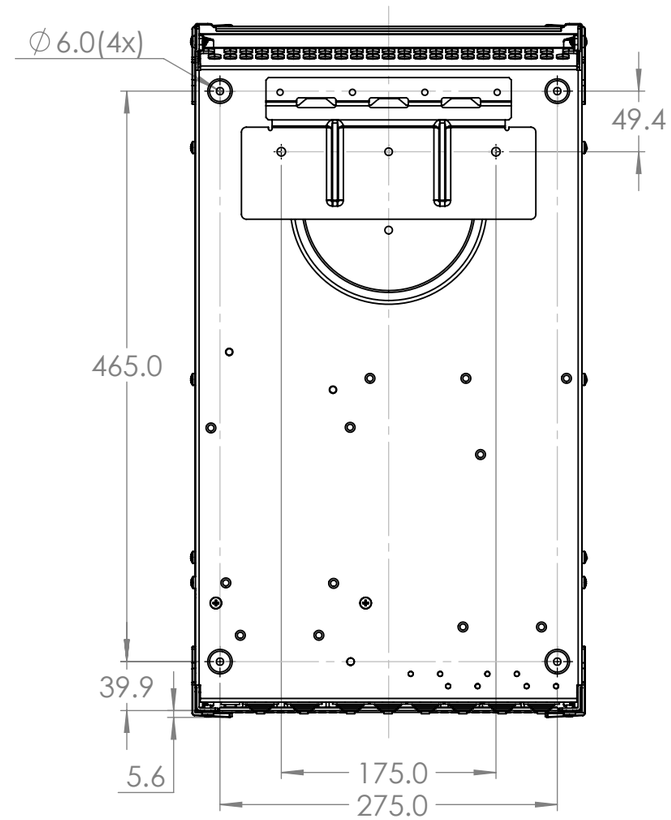

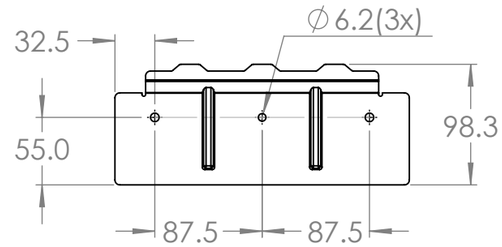

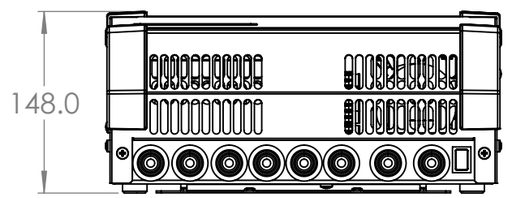

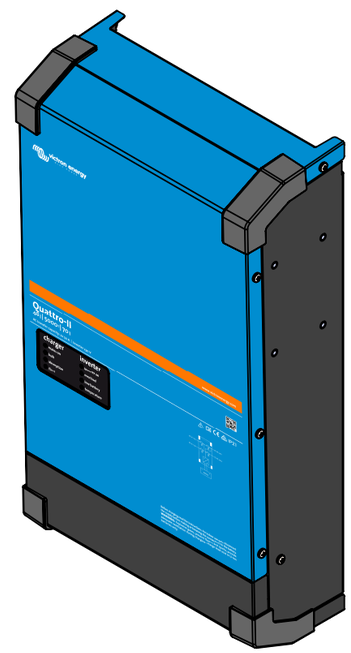

Dimensions in mm

victron energy
BLUE POWER

Rev00