Dimension Drawing - GX Touch 50 Protection Cover	
BPP900462050	GX Touch 50 protection cover

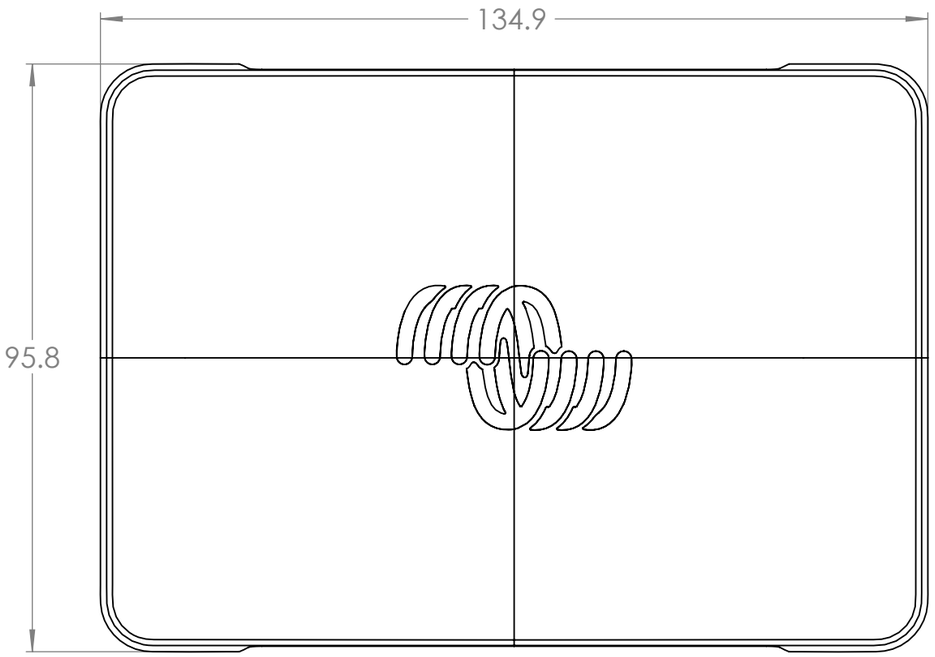

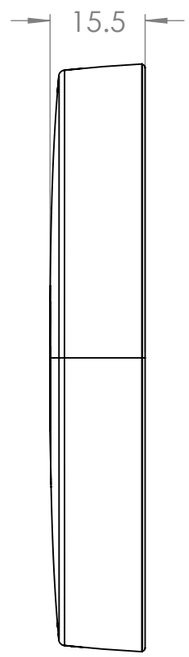

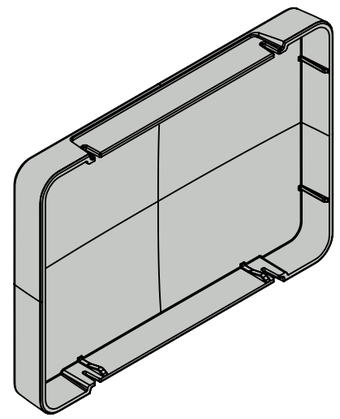

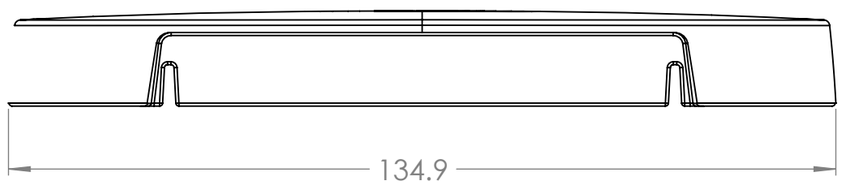

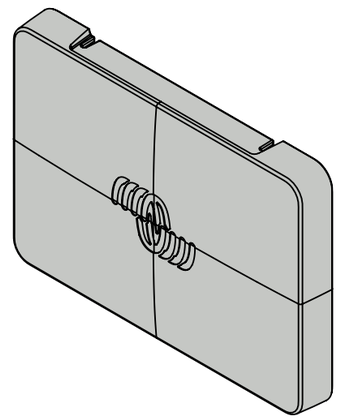

Dimensions in mm

victron energy
BLUE POWER

Rev00