Dimension Drawing - SmartSolar MPPT RS	
SCC145120410	SmartSolar MPPT RS 450/200-Tr

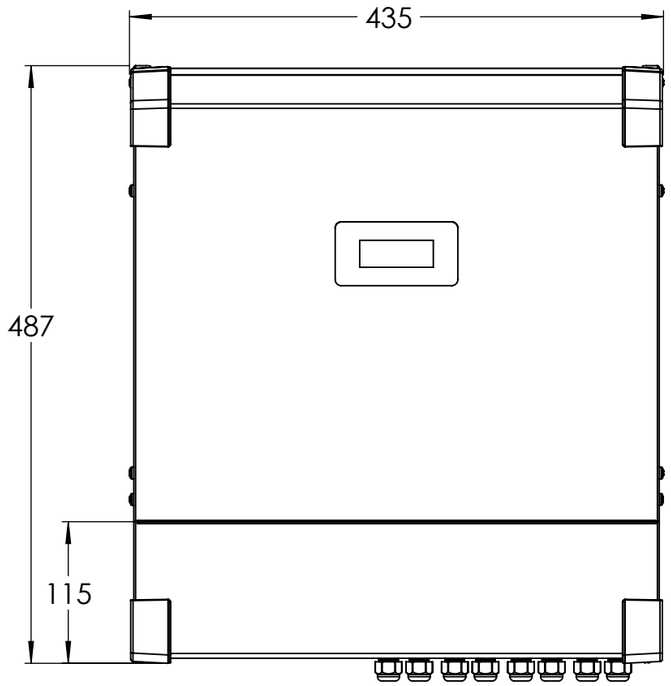

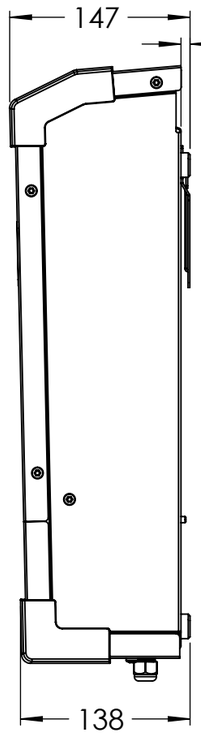

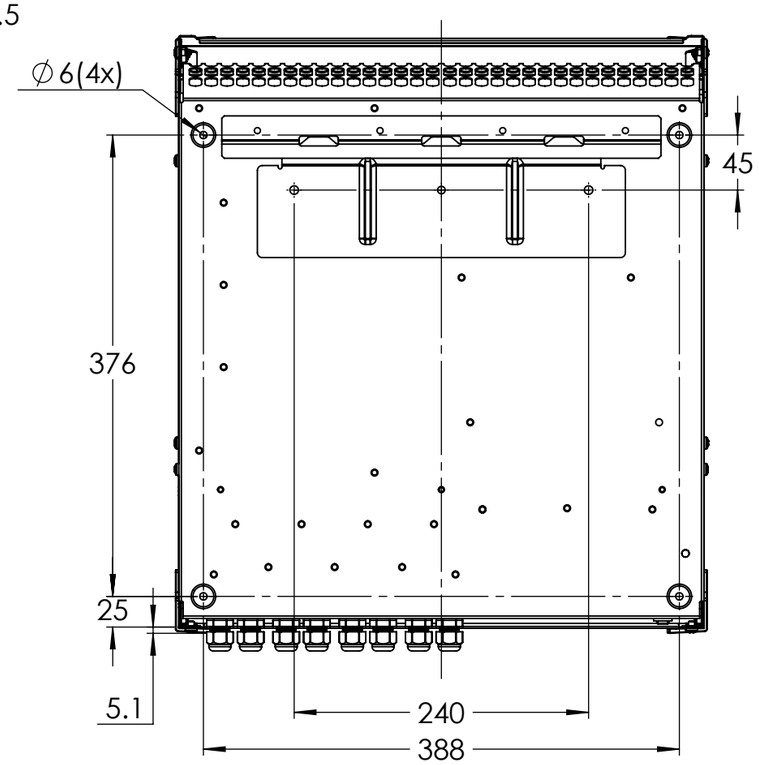

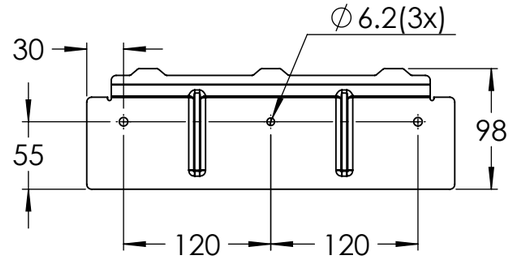

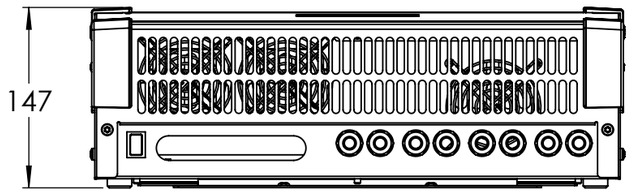

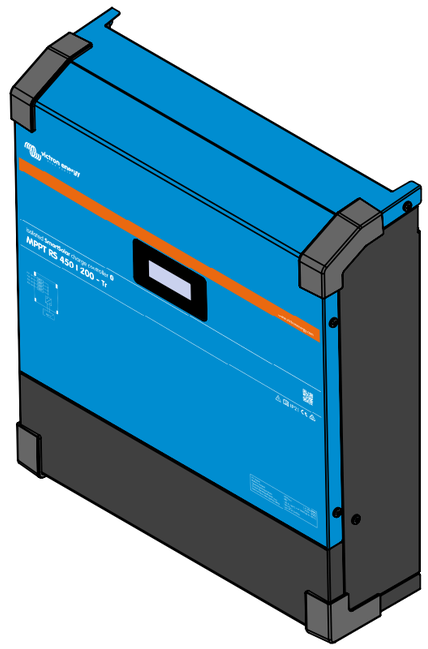

Dimensions in mm

victron energy
BLUE POWER

Rev00